END ARMATUREN

Qualität von Anfang an.

Original Operating Manual
Solenoid Valves

acc. to annex VI of the Directive 2006/42/EC

END-Armaturen GmbH & Co. KG
Postfach (PLZ 32503) 100 342 · Oberbecksener Str. 78 · D-32547 Bad Oeynhausen · Telefon (05731) 7900-0 · Telefax (05731) 7900-199 · http://www.end.de

END-Armaturen GmbH & Co. KG has the right or change parts of the solenoid valves at any time without prior or direct notice to the client. The contents of this publication are subject to change without notice.

This publication has been written with great care. However, **END-Armaturen GmbH & Co.KG** cannot be held responsible, either for any errors occuring in this publication or for their consequences.

The products are specified by the statements in this documentation; no assurance or the properties is given.

END-Armaturen GmbH & Co. KG
Oberbecksener Straße 78
D-32547 Bad Oeynhausen
Telefon: 05731 / 7900 - 0
Telefax: 05731 / 7900 - 199
Internet: http://www.end.de
E-Mail: post@end.de

Edition: 04.2012

The right is reserved to change designs and devices.

Contents

Contents

1 Foreword

Dear customer, Dear assembler / user,

these operation and installation manuals are intended to give you the knowledge which is necessary for you to be able to carry out the mounting and adjustment of a solenoid valve rapidly and correctly.

Please read these instructions carefully and pay particular attention to the advice and warning notes.

Only instructed and qualified mechanician should mount, adjust or maintain the solenoid valves.

The solenoid valves will be deliver in several versions relative to

- *ways*
- *operations*
- *material*
- *type of voltage and nominal voltage*
- *connection type and connection size.*

There are also several options available.

- *Normally open*
- *Explosion proofed*

With accessories

- *speed control*
- *electric position indication*
- *a manual override*

The field of use of the solenoid valve is predominately, in food and drink industry, in chemical installations, in heating and air conditioning technology, in industrial fittings, in water treatment etc.

If you have any questions in relation to the solenoid valve we shall be pleased to answer them. The telephone number will be found on the inside cover of these operation and installation manual.

Yours
END-Armaturen GmbH & Co. KG

2 General advice

2.1 Validity

These mounting and installation manual is valid for the standard version of the solenoid valve ME, MC, MG, MA, MB and MI.

We wish to point out expressly, that the explosion proofed version of mentioned solenoid valves (acc. to directive 94/9/EC (ATEX)), will be described in special mounting and installation manuals.

2.2 Inward monitoring

Please check
- directly after delivery the solenoid valve for any transport damages and deficiencies.
- with reference to the accompanying delivery note the number of parts.

Do not leave any parts in the package.

2.3 Complaints

Claims for replacement or goods which relate to transport damage can only be considered valid if the delivery company is notified without delay.

In case of returns (because of transport damage / repairs), please make a damage protocol and send the parts back to the manufacturer, if possible in the original packaging.

In case of a return, please mention the following:
- Name and address of the consignee
- Stock-/ ordering-/ article-number
- Description of the defect

2.4 Guarantee

For our solenoid valve we give a guarantee period in accordance with the sales contract. The end of the normal duration of life of the wearing parts represents no defect.

The warranty and guarantee rules of **END-Armaturen GmbH & Co. KG** are applicable.

2.5 Symbols and their signification

Paragraphs which are identified with this symbol contain very important advices; this also includes advices for averting health risks. Observe these paragraphs without fail!

Paragraphs which are identified with this symbol contain very important advices, this also includes how to avoid damage to property. Observe these papgraphs without fail!

This symbol indicates paragraphs which contain comments / advices or tips.

This spanner identifies the description of actions which you should carry out.

3 Safety advice

Depending on the technical circumstances and the time under and at which the solenoid valve is mounted, adjusted and commissioned, you must in each case take into account particular safety aspects!

If, for example, the valve works in an operational chemical plant, the potential hazards of commissioning have another dimension from that when this is only being carried out for test purposes an a „dry“ part of the plant in the assembly room.

Since we do not know the circumstances at the time of the mounting / adjusting / commissioning you may find advice on hazards in the following description which are not relevant to you.

Please observe (only) the advice which applies to your situation!

The partly completed machinery must not be put into service until the final machinery into which it is to be incorporated has been declared in conformity with the provisions of the Directive 2006/42/EC on machinery, where appropriate.

The valves shall be provided with an electrical circuit which ensures the limits of the harmonised standards EN 61000 ff are observed, and hence the requirements of the Electromagnetic Compatibility Guideline 2004/108/EG (EEC) satisfield.

3.1. Personal protection

3.1.1. Safety advice for mounting

We wish to point out expressly that the mounting, the electrical installation and the adjustment of the solenoid valves and the accessories must be carried out only by trained specialist personnel having mechanical and electrical knowledge!

Don`t move off the solenoid from the tube by switched on power supply.

At first switch off all the devices / machines / plant affected by mounting or repair!If appropriate, isolate the devices / machines / plant from the mains.

Check (for example in chemical plants) whether the switching off of devices / machines / plant will causes potential danger!

If appropriate, in the event of a fault in the solenoid valve (in a plant which is in operation) inform the shift foreman / safety engineer or the works manager without delay about the fault, in order, for example, to avoid an outflow / overflow of chemicals or the discharge of gases in good time by means of suitable measures!

Before mounting or repair, remove the pressure from pneumatic / hydraulic devices / machines / plant!

Emty the conduit from medium.

If necessary, set up warning signs in order to prevent the inadvertent starting up of the devices / machine / plant.

Observe the respective relevant professional safety and accident prevention regulations when carrying out the mounting / repair.

Check the correct functioning of the safety equipment (for example the emergency push off buttons /safety valves, etc.!

3.1.2 Safety advice for adjusment and starting

As a result of the starting of a solenoid valve the flow of gases, steam, liquids, etc. may be enabled or interrupted.

Satisfy yourself that, as the result of the starting or the test adjustment of the solenoid valve, no potential hazard will be produced for the personnel or the environment!

If necessary, set up warning signs in order to prevent the inadvertent starting up or shutting down of the devices / machines / plant!

By ending mounting check the correct function and the tightness of the solenoid valve.

Check the right position and correct function of perhaps mounted accessories.

Check the right function of all safety devices (for example emergency push off buttons, etc.)!

Carry out the starting and the adjustment only in accordance with the instructions described it this documentation!

3.2 Device safety

The solenoid valve
- is a quality product which is produced in accordance with the recognized industrial regulations.
- left the manufacturer`s work in a perfect condition!

In order to maintain this condition, as installer / user you must carry out your task in accordance with the descriptions in these instructions, technically correctly and with the greatest possible precision!

We assume that you have, as a trained specialist, sound mechanical and electrical knowledge!

The solenoid valve must be used only for a purpose corresponding to its construction!

The solenoid valve must be used within the values specified in the technical data.

The mentioned data are experience values only and describe the general condition of our product. They should be used as a guideline to evaluate the suitability of the non-concreate individual case, but without any guarantee for the suitability given by END-Automation.
The final responsibility to proof and confirm the suitability of our products, for which we confirm the perfect (faultless) quality by our delivery- and payment terms, lies in the dependance with your constructive responsibility to the end-user.

Satisfy yourself that, as a result or the mounting, the commissioning or as a result of the test adjustments on the solenoid valve, no potential hazards will be produced for devices / machines / plant!

In case of the working conditions, heating up of the coils up to 155 °C will be possible.

Open the solenoid valve only to such an extant as described in this documentation!

Don`t mount the solenoid valve, start the solenoid valve or carry out any adjustments on it if the solenoid valve, the supply lines or the part of the plant on which it is flange-mounted is damaged!

By ending mounting check the correct function and the tightness of the solenoid valve.

By mounting the solenoid valves in the open air you have to schedule a protective device to prevent the entry of moisture.

4 Device description

4.1 Device description solenoid valve

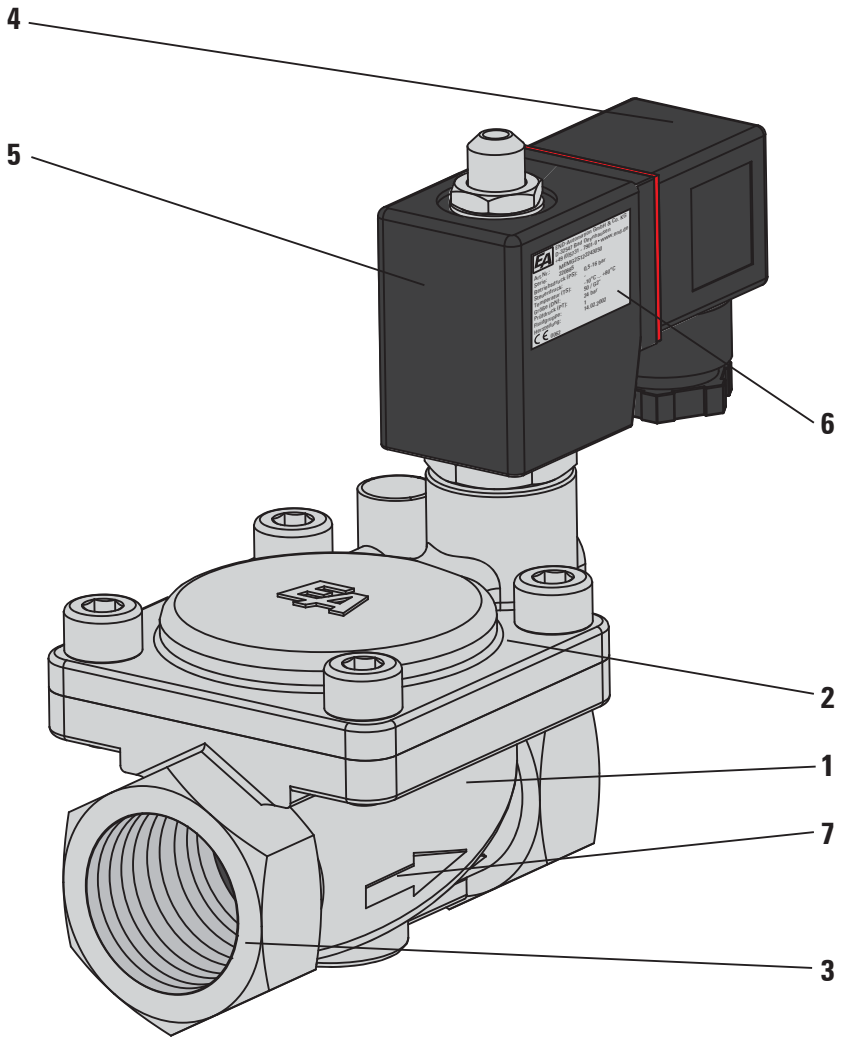

1 Body
2 Bonnet
3 Connection end
4 Socket (turnable 4x 90°)
5 Solenoid (rotatable 360°)
6 Name plate
7 Flow direction

Fig. 4.1 - solenoid valve MEMG2S

4.2 Device variants

The solenoid valves will be delivered in various variants. The mentioned data describe the general condition of our product. To proof and confirm the suitability of the product lies in the responsibility to the end-user.

The following table explains the composition of the article number to you. These article numbers will be seen on the name plate:

For example: **MEMG2S122243050**
solenoid valve; female thread acc. to DIN ISO 228T1, 2/2-ways,
servo assisted, brass, NBR seals, 24V DC,
Solenoid size 11 watts, connecting size G 2“

Explanation of article number composition for solenoid valves

1. - 2. Digit Product	3. Digit Type	4. Digit Connection	5. Digit Ways	6. Digit Operation	7. Digit Body material
ME **MC** **MG** **MA** **MB**	**A** **B** **C** . . . **Z**	**G** = B.S.P. thread DIN ISO 228 T1 **A** = Welded connection acc. to DIN 3239 **L** = Welded connection acc. to ISO 4200 **M**= Welded connection acc. to DIN 11850-R2 **F** = Flanged connection acc. to DIN 2531/2533/2545	**2** = 2/2-ways **3** = 3/2-ways	**D** = direct acting **Z** = combined operation **S** = servo assisted	**1** = Brass **2** = Bronze **3** = Stainless steel **4** = Carbon steel GS-C25 **5** = Grey cast iron GG-25 **6** = Ductile ironGGG-40 **7** = Light alloy **8** = Plastic

8. Digit Seals material	9. Digit Type of voltage	10. Digit Voltage	11. - 12. Digit Solenoid size		
1 = PTFE **2** = NBR **3** = FKM **4** = EPDM	**1** = Alternate current (AC) **2** = Direct current (DC) **3** = AC with rectifier **4** = dto. seperately **5** = E Ex m II T4 **6** = E Ex m II T4 **7** = E Ex d II cT4 **8** = E Ex d II cT4	**1** = 12V[1] **2** = 24V **3** = 42V **4** = 110V **5** = 207V **6** = 230V **7** = 400V[1] [1] = Special voltage	product **Art. MGxxxx** **40** = 6,2 Watt **41** = 7 Watt **42** = 10 Watt **43** = 11 Watt **44** = 14 Watt **45** = 18 Watt **46** = 20 Watt **47** = 21 Watt **48** = 26 Watt **49** = 27 Watt **50** = 29 Watt	**51** = 30 Watt **52** = 33 Watt **53** = 44 Watt **54** = 47 Watt **55** = 60 Watt **56** = 80 Watt **57** = 98 Watt **58** = 140 Watt **59** = **60** =	**Art. MCxxxx** **70** = 9 Watt **71** = 14 Watt **72** = 18 Watt **73** = 50 Watt **74** = 30 Watt **Art. MBxxxx** **63** = 12 Watt **Art. MIxxxx** **66** = 16 Watt **67** = 30 Watt **68** = 65 Watt

13. - 15. Digit Connection Size							
Connection size for Flanged and welded connection		threaded connection		For small valves: Connection size + seat-Ø			
				G 1/8	DN1,5	=	**315**
006 =		G 1/8		G 1/8	DN2,0	=	**320**
008 =		G 1/4		G 1/8	DN2,5	=	**325**
010 =		G 3/8		.....			
015 =	DN15	G 1/2		G 1/4	DN1,5	=	**415**
020 =	DN20	G 3/4		G 1/4	DN2,0	=	**420**
025 =	DN25	G 1		G 1/4	DN2,5	=	**425**
032 =	DN32	G 1 1/4		.....			
040 =	DN40	G 1 1/2		G 3/8	DN1,5	=	**515**
050 =	DN50	G 2		G 3/8	DN2,0	=	**520**
065 =	DN65	G 2 1/2		G 3/8	DN2,5	=	**525**
080 =	DN80	G 3		....			
100 =	DN100	G 4		G 1/2	DN1,5	=	**615**
125 =	DN125			G 1/2	DN2,0	=	**620**
150 =	DN150			G 1/2	DN2,5	=	**625**
other sizes and NPT- thread on request!				.... without threaded connection (flanged connection) = 7			

16. - 20. Digit Options
A2 = Threaded connection G 1/8 female / G 1/8 male
A3 = Threaded connection G 1/4 female / G 1/8 male
A4 = Threaded connection G 1/4 female / G 1/4 male
AV = Pick-up amplifier
CN = Chemical nickel-plated
DL = Illuminated sealing
EH = Electric auxiliary contact
ES = Electric / mechanic position indicator
HN = Manual override
NO = Nominal open
NS = Electrical position indicator (contactless)
OF = Free of oil and grease
OS = Optical position indicator (LED)
SL = LED and protective circut
SR = Speed control
VD = For vacuum and pressure
V = For vacuum

4.3 Name-plate

The solenoid valves will be provided with a name-plate, which permits a definite identification of the valves and shows the most important technical data to you. The name-plate should not displaced or changed.

Fig. 4.2 - name plate

Art.Nr.	article number of the valve (see also chapter 4 „device variants“)
Serie	order- or production-number
Betriebsdruck (PS)	max. admissible working pressure of the valve [bar]
Temperatur (TS)	temperature range of the valve
Größe (DN)	connecting size of the valve
Prüfdruck (PT)	testing pressure of body
Fluidgruppe	allowed fluid group of the valve
Herstellung	month and year of manufacturing

4.4 Description of function

4.4.1 General

Solenoid valves will cut off media flow by using a diaphragm or by seat sealing. The solenoid valves will seal in the flow direction of the media only.

Referring to the control systems of the solenoid valves we distinguish between:

- direct acting solenoid valves
- servo-assisted solenoid valves
- combined operated solenoid valves

4.4.2 Direct acting solenoid valve

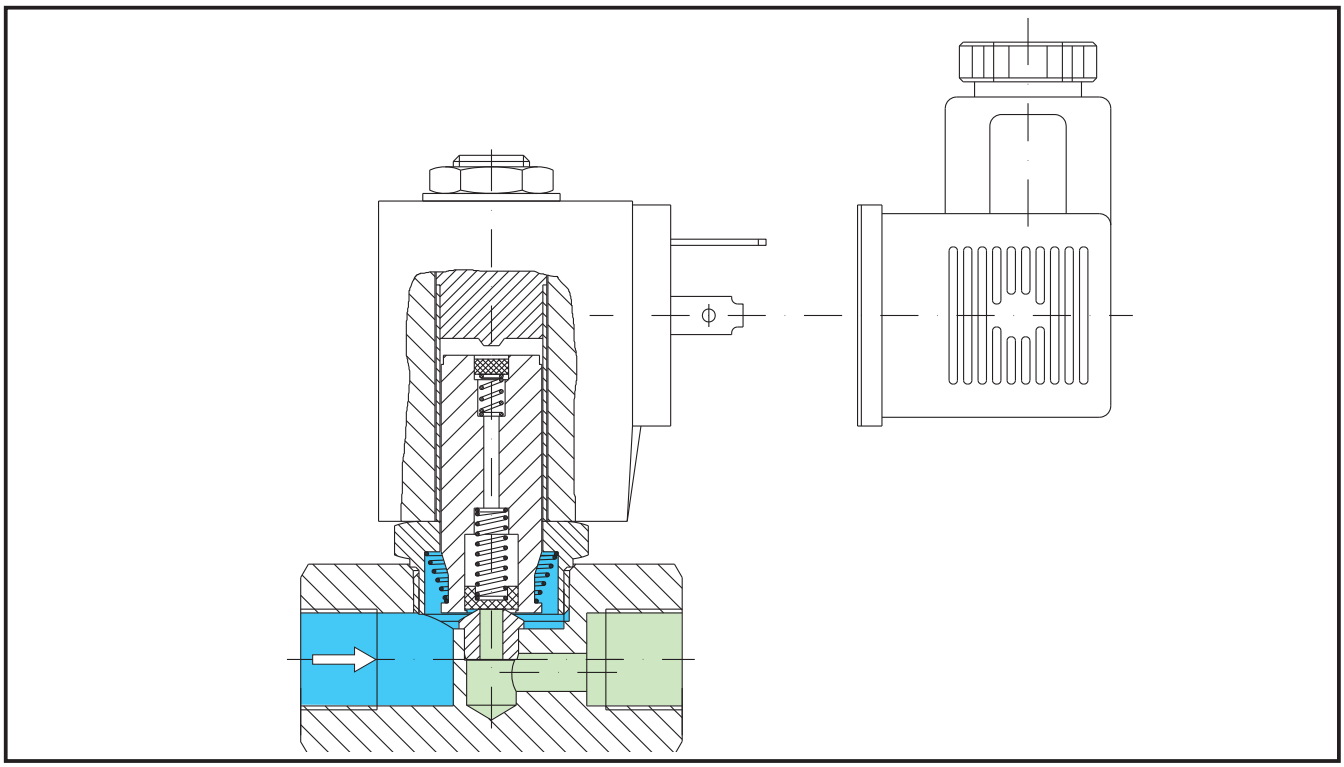

Fig. 4.2 - Description of function: direct acting solenoid valve

Subjected to the action of the coil, the plunger is directly connected to the valve disc, either opens or shuts the orifice, depending on whether the current is on or off (solenoid energized or de- energized). In this case, the coil directly supplies all the power needed to lift or lower the valve disc; operations are thus independent of fluid pressure and flow rate. The solenoid valve can operate at pressures ranging from zero to the top valve specified in the tables.

This kind of acting is mainly used on smaller valves as well as on bigger valves with low working pressure (gas valves).

4.4.3 Servo-assisted solenoid valves

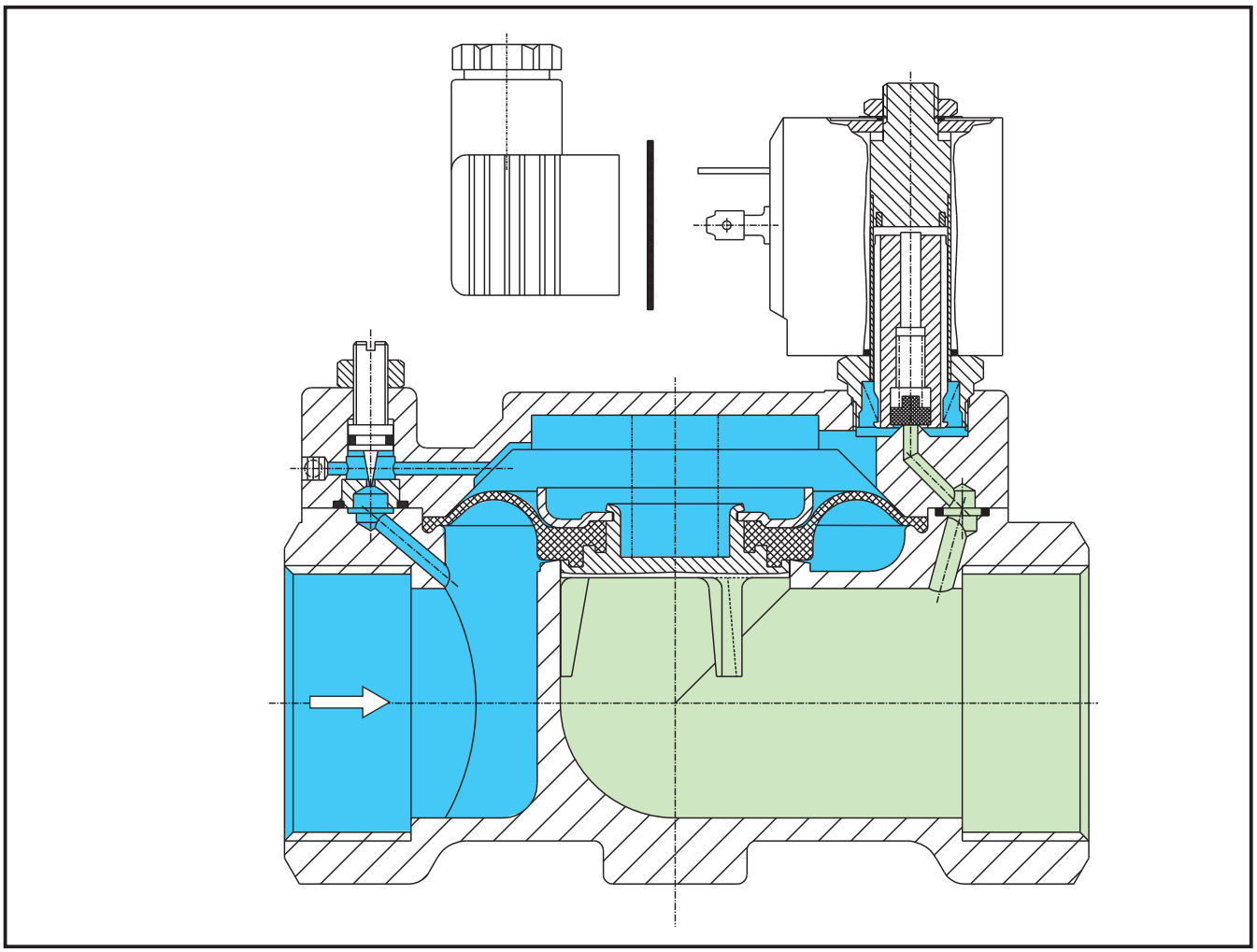

Fig. 4.3 - description of function: servo-assisted solenoid valves

Servo-assisted valves requires a pressure difference for opening and closing the main closing element. This pressure difference is indicated as minimum medium pressure.

These valves have a nozzle driven by the coil and a diaphragm that shuts off the main valve orifice; operations relay on fluid pressure. When the coil is energized the core opens the pilot nozzle so as to release the pressure across the diaphragm from the valve body. The resulting difference in pressure lifts the diaphragm free of the valve passage. When the coil is de-energized the pilot nozzle shuts and the pressure passes through a so-called „equalization“ hole and is restored across the diaphragm, causing the valve shut. This operating system calls for a difference between the inlet and the outlet pressures of the solenoid valve, corresponding to the force required to lift the diaphragm or keep it positioned against the main valve orifice.

The efficiency of the valve seat sealing depends on the cross section of the seat, the pressure difference between inlet and outlet port and the pre-loading force of the valve main spring.

On servo-assisted solenoid valves it is possible to operate big-size valves under high working pressures by means of small actuating elements.

4.4.4 Combined operated solenoid valves

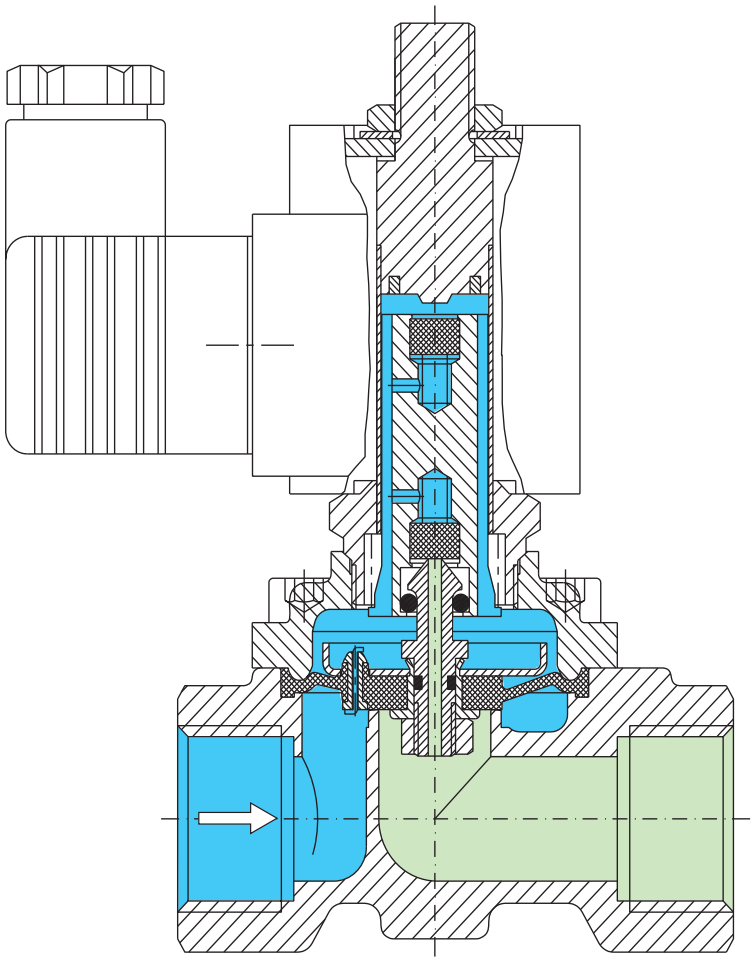

Fig. 4.4 - Description of function: Combined operated solenoid valves

Combined operated solenoid valves does not require any pressure difference for opening or shuting the main closing element. According to the indicated pressure diagrams they work from 0 bar upwards

The plunger is connected to the diaphragm witch is fitted with a pilot nozzle. The attraction of the plunger therefore causes the pilot nozzle to open and the ensuing pressure lifts the diaphragm; this action is further reinforced by the opening stroke of the plunger. Thus a combination of direct (plunger) and indirect (diaphragm) operations ensure full passage even at low pressures and operations and seal remain regular even at zero pressure.

By taking advantage or the surfaces differences, this type of valves enables operating big-size valves with high pressure, the actuators being comparatively small against direct acting solenoid valves.

The actuator stroke must be at least as high as the valve lift. The force must be sufficient for opening the pilot bore and the main closing element against the spring force.

4.5 Functional description of the options

4.5.1 Illuminated sealing

If the solenoid valve is energized the sealing between the solenoid and the plug will be illuminated.

4.5.2 Speed control

With the speed control you can change the diameter of the pilot drilling at servo-assisted solenoid valves and combined operated solenoid valves . Therefore a control of the closing time will take place. This option isn`t available for solenoid valves with a connection size ½“ and smaller sizes.

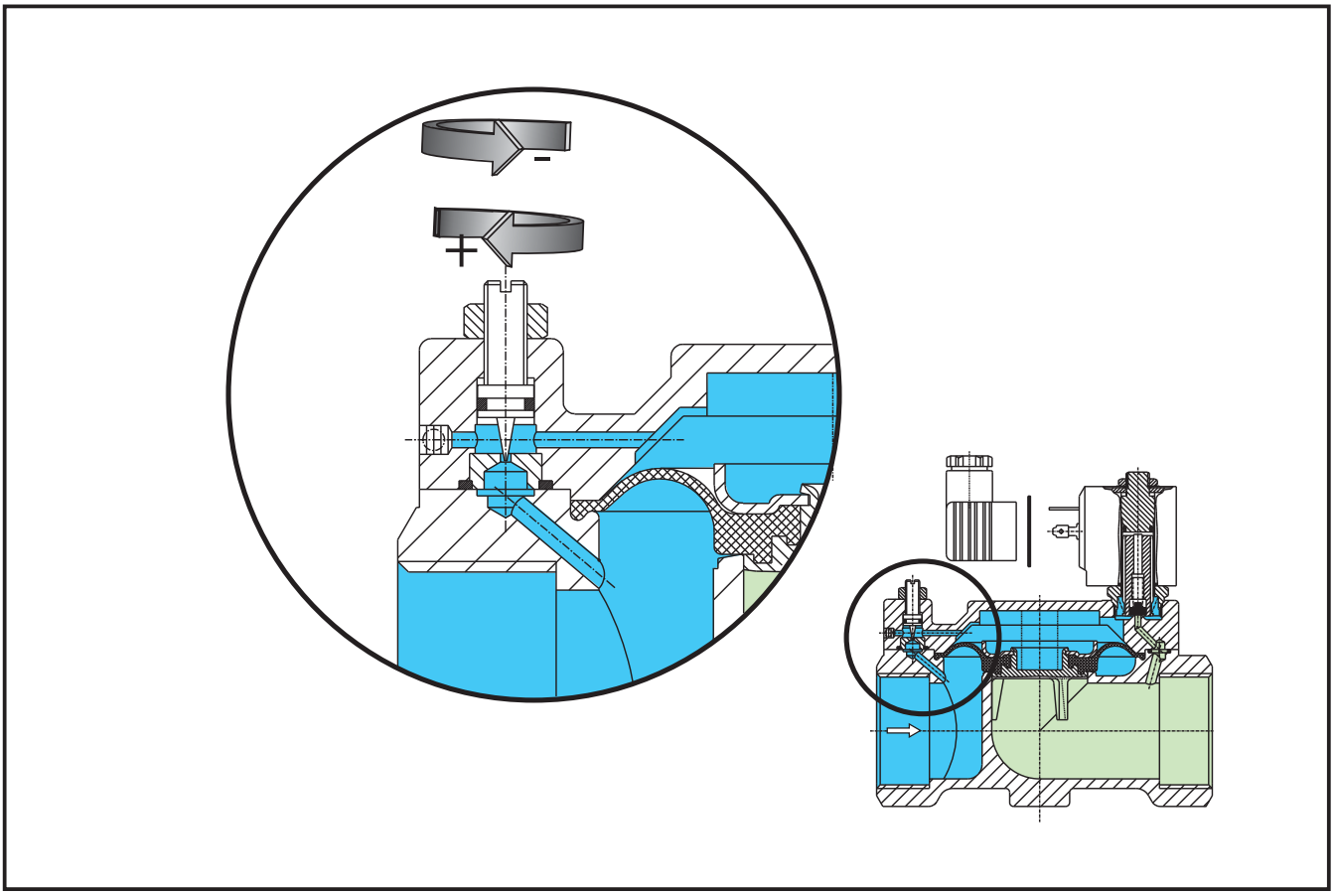

Fig. 4.5 -Description of function: Speed control

4.5.3 Normally open

In this case the de-energized solenoid valve will be hold in the open position by spring force, the energized solenoid closes the valve.

4.5.4 Manuel override

At the option „manuel override“ the valve will be actuated depending on the variants by a hand wheel (combined operated solenoid valve) or by a adjusting screw (servo-assisted and direct acting solenoid valves). At combined operated valves the main closing element will be lift up by turning a spindle with a hand wheel (see Fig. 4.6).At servo-assisted or direct acting valves the plunger (3) will be lift up by a pin (2) which will by moved by turning a eccentric screw (1), therefore the pilot drilling will be open. (see Fig.4.7)

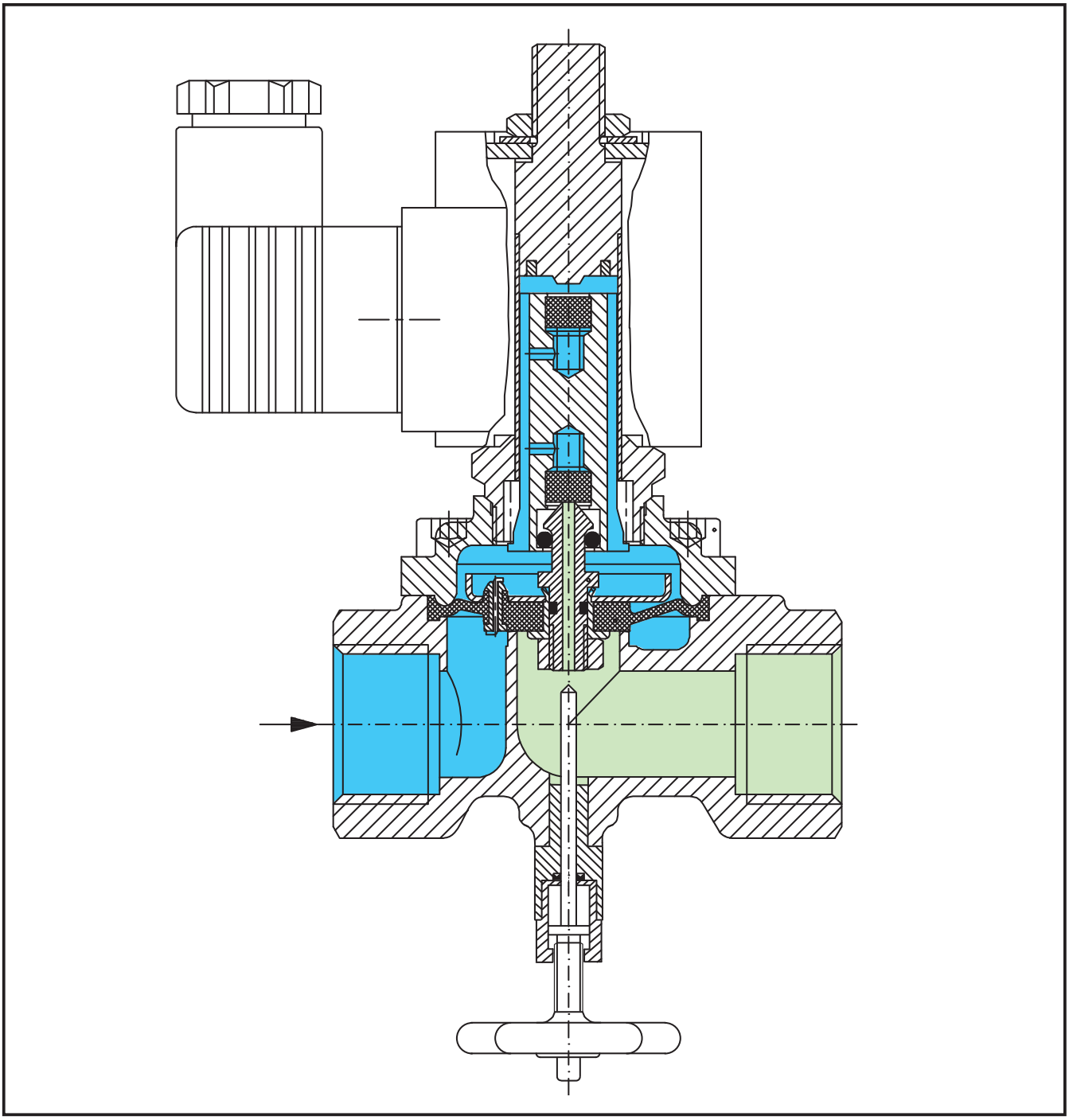

Fig. 4.6 - Description of function: Manuel override combined operated valves

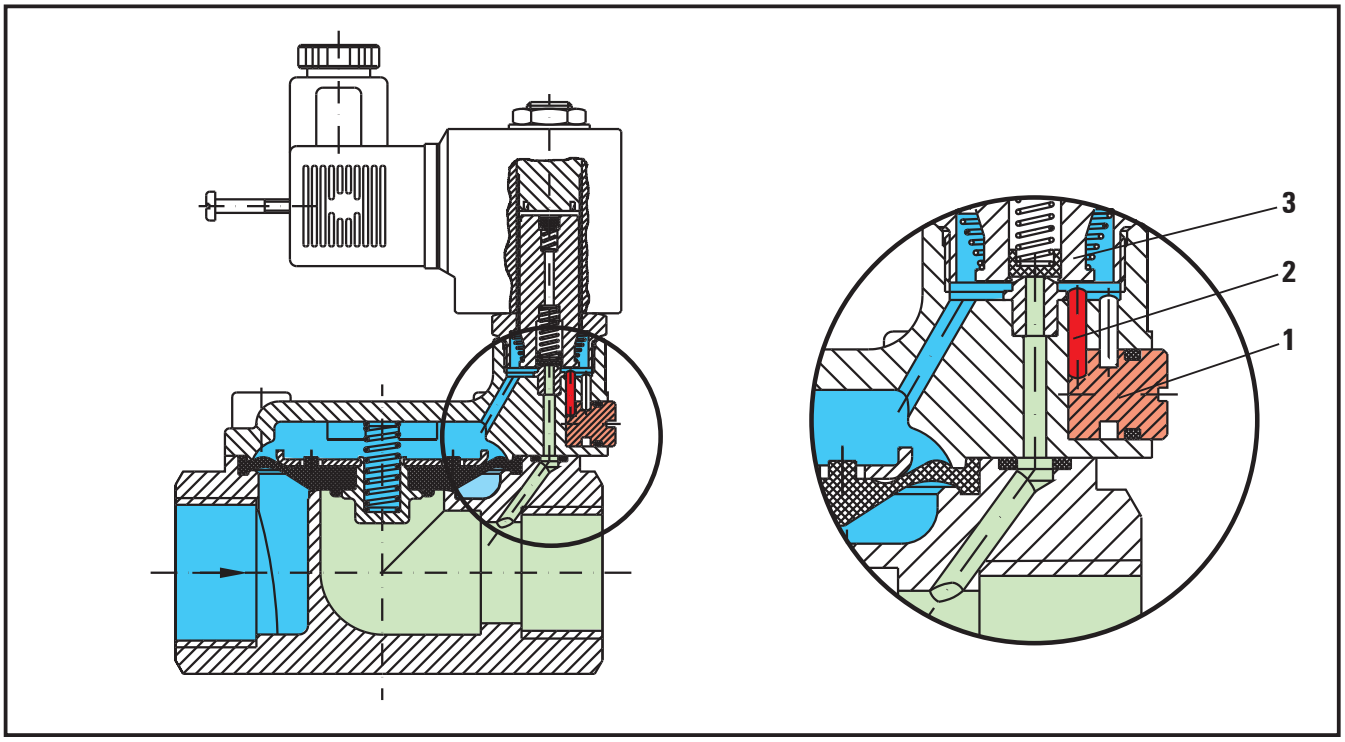

Fig. 4.7 - Description of function: manual operation - servo-assisted solenoid valve

4.5.5 Electrical position indicator (contactless)

The electrical position indicator is needed to show the operation condition of a solenoid valve over a great distance. It is also possible to indicate a signal to a control. Therefore are different limit switches available: Reed-contact or inductive proximity limit switches.

In case of different versions one or both operation conditions could be indicated.

5 Mounting / disassembly

The mounting of the solenoid valves ristricts to
- the mechanical mounting into the prescribed pipes
- the electrical mounting of the solenoid valve and perhaps the mounting of accessories

The installation of direct acting and servo-assisted valves will be as you desired.
Combined operated solenoid valves should only be mounted with a vertical standing coil.

In the following description we assume that you have read the former chapters attentive. We also assume that you will observe the safety advices and warnings from chapter 3. „safety advices“ during the mounting / disassembly.

If you have not read chapter 3. „safety advices“ until now, read these important advices now and turn back to this page!

The mounting and the electrical installation must be carried out only by trained specialist personnel with mechanical and electrical knowledge.

The following figures are showing the pressure actuated valves without any options! Perhaps the valve mounting by you is equip with options.

Your device variant you can see at the name-plate on the solenoid valve. For their meaning see also chapter

→ 4.2 „Device variants“.

The mechanical installation are the same by all variants. It differs only by the type of connection.

Observe the flow direction, specified on the valve body.

Before mounting the solenoid valve clean up the pipes. Pollution will reduce the safety and the duration of life of the valve. If necessary mount a strainer in front of the valve.

Avoid strains of the body by non align pipes.

The electrical installation should happened in accordance to the additional mounted accessories. Therefore, for the electrical installation, observe the circut and wiring diagram on page 26 of these mounting and operating instructions.
At installation in the open or moist ambient you have to take special measures to protect the actuator against moisture.

5.1 Mounting of the solenoid valve (threaded connection)

Before lay on sealing compounds, check the hardly screwing by the pipes into the valve body.

Lay on the correct sealing compounds on the pipes end. By using PTFE- ribbon or hemp sealings observe the screw direction. Don`t use sealing compounds which are not prescribed for your employment.

Screw the pipes into the connection ends of the valve. Don`t use the solenoid as a lever.

Strike up the pipes with pressure after that time the manufacturer of the sealing compounds pretends for harden it.

Check the tightness of all connections.

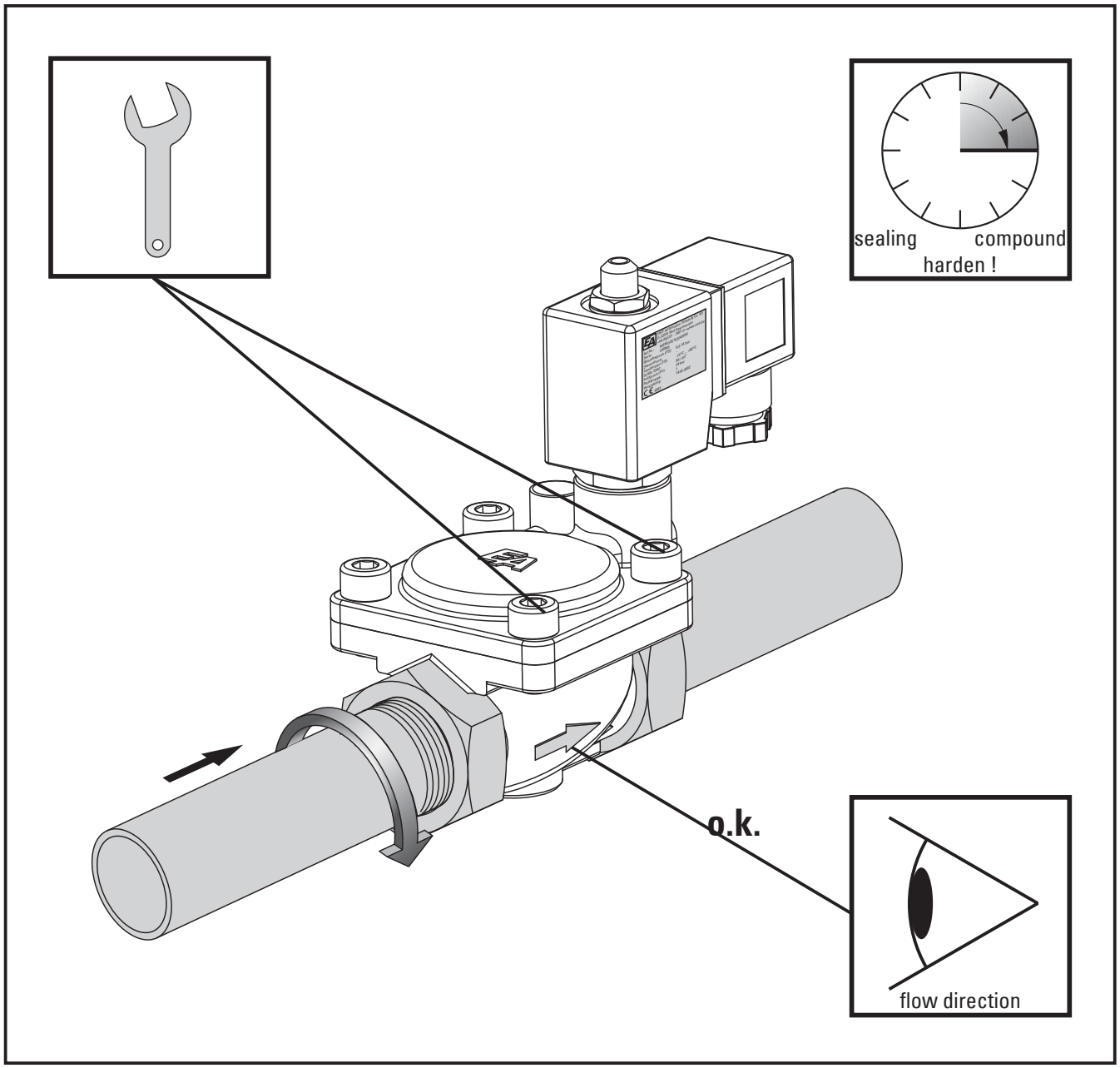

Fig. 5.1 - Mounting / disassembly - threaded connection

5.2 Mounting of the solenoid valve (welded connection)

By welding the solenoid valve between the pipes you have to disassemble the valve top first, to prevent the damage of the seals.

5.2.1 Disassembly of the solenoid valve`s top

Clamp the valve between a vice carefully. Be using guard plates you can prevent the damage of the ends of the body.

Loosen the screws of the cap by using a fit spanner.

Screw out the screws of the valve body and take the cap by side carefully. Remove the diaphragm from the valve body. If you should disassemble some solenoid valves, place marks on the body, diaphragm and top of each solenoid valve that .

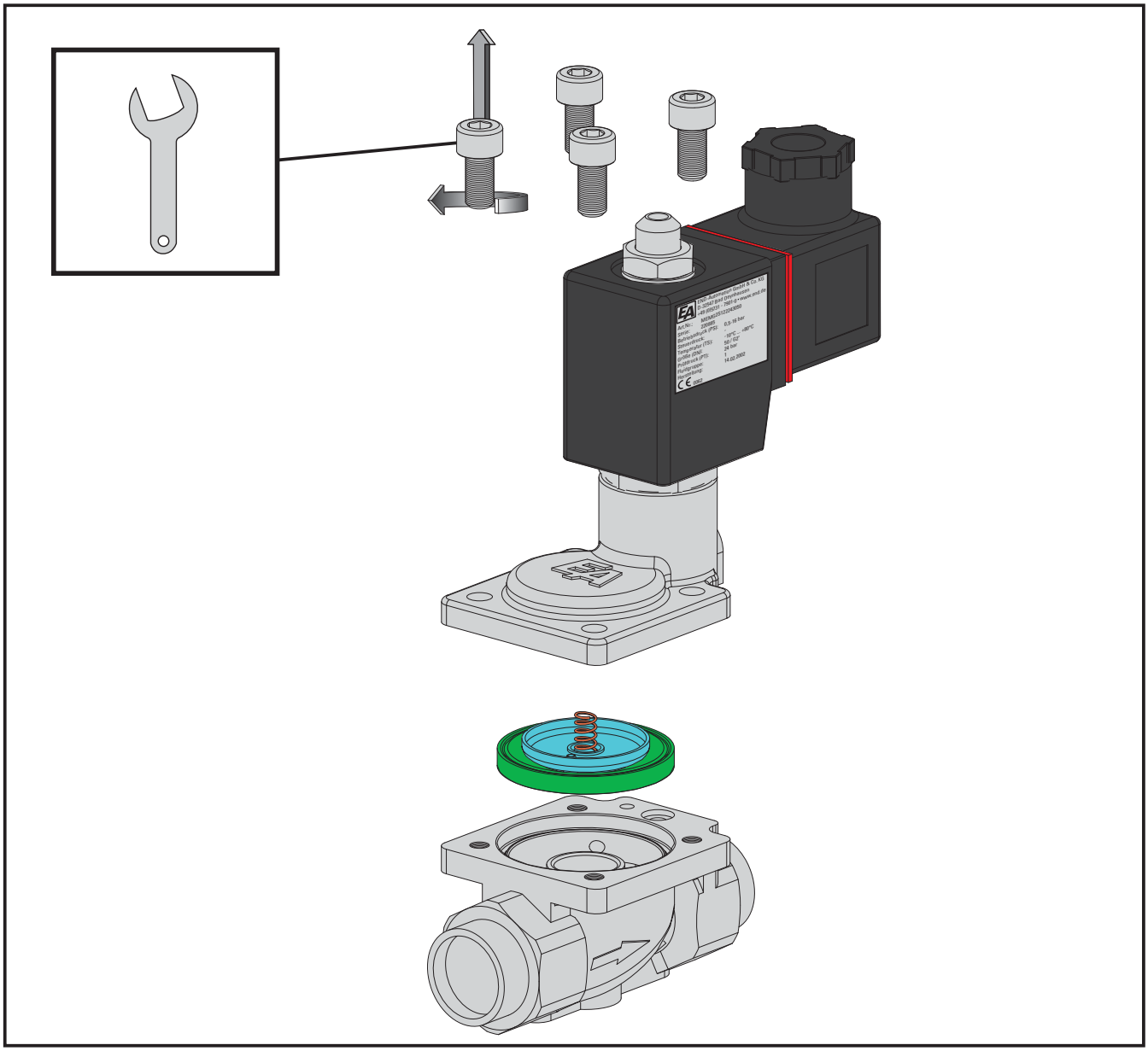

Fig. 5.2 - Mounting/ disassembly - welded connection, disassembly of the valve`s top

5.2.2 Welding of the solenoid valve body between two pipes

By welding the valve body with the pipes observe appropriate demands and guide lines.

The safety demands by welding are depending on the place and the position of the point of weld. Welding the parts at a serviceable device / machine / plant the potential of danger is as higher as welding the parts in a welding room.

If appropriate, inform the shift foreman / safety engineer or the works manager and the fire brigade of your factory.

By welding observe your own national guide lines about safety and prevention or accidents.

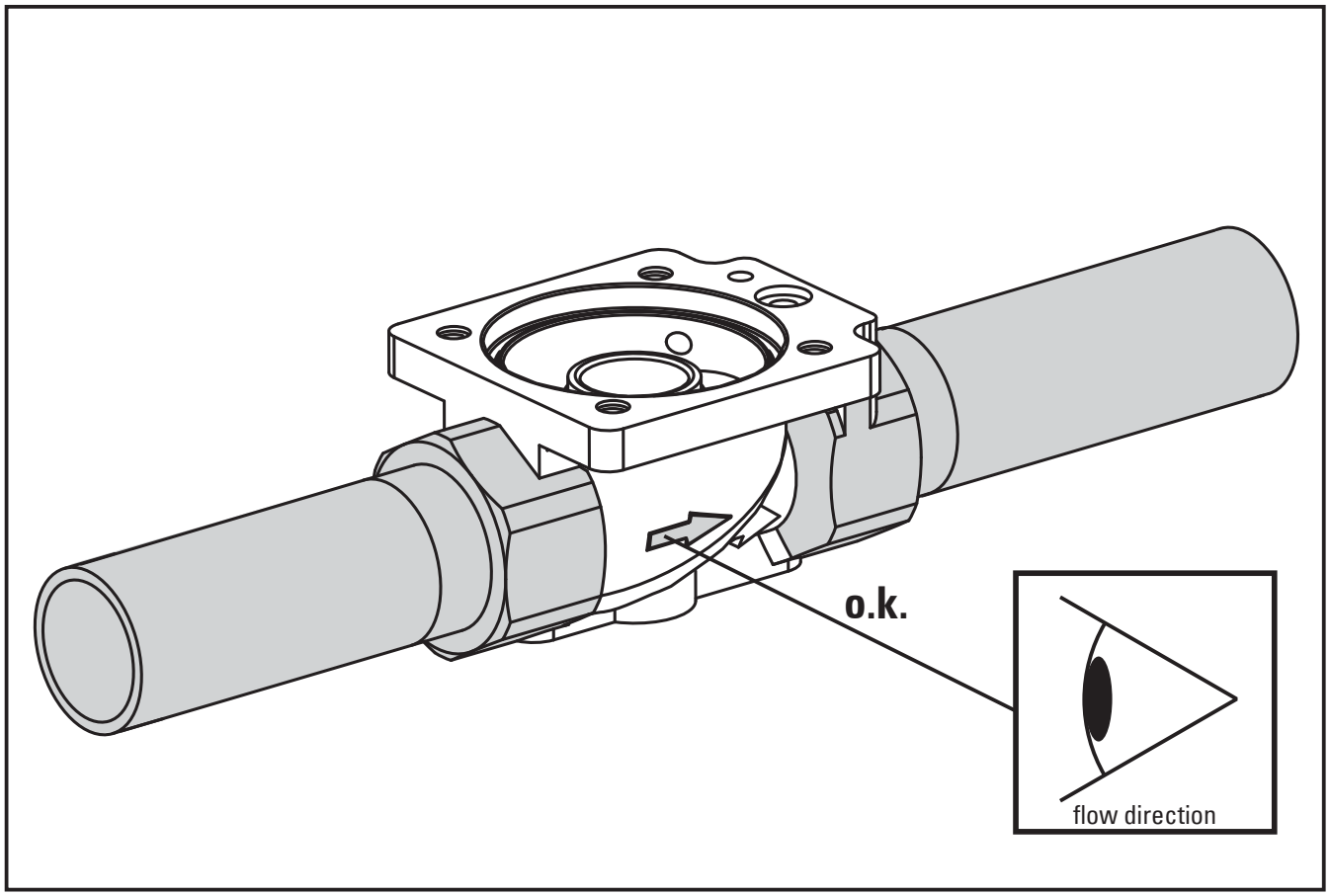

Fig. 5.3 - Mounting / disassembly - Welded connection, welding of the body

5.2.3 Mounting of the bonnet

Before mounting the bonnet let the valve body cool down.

Insert the diaphragm into the body of the solenoid valve. Take care about the correct placement of the diaphragm and that there will be no pollution into the body of the solenoid valve.

Put the top of the solenoid valve onto the body and insert the screws. When you have insert all the screws start fastening them.

Tighten the screws with a fit spanner.

Check the tightness of all connections.

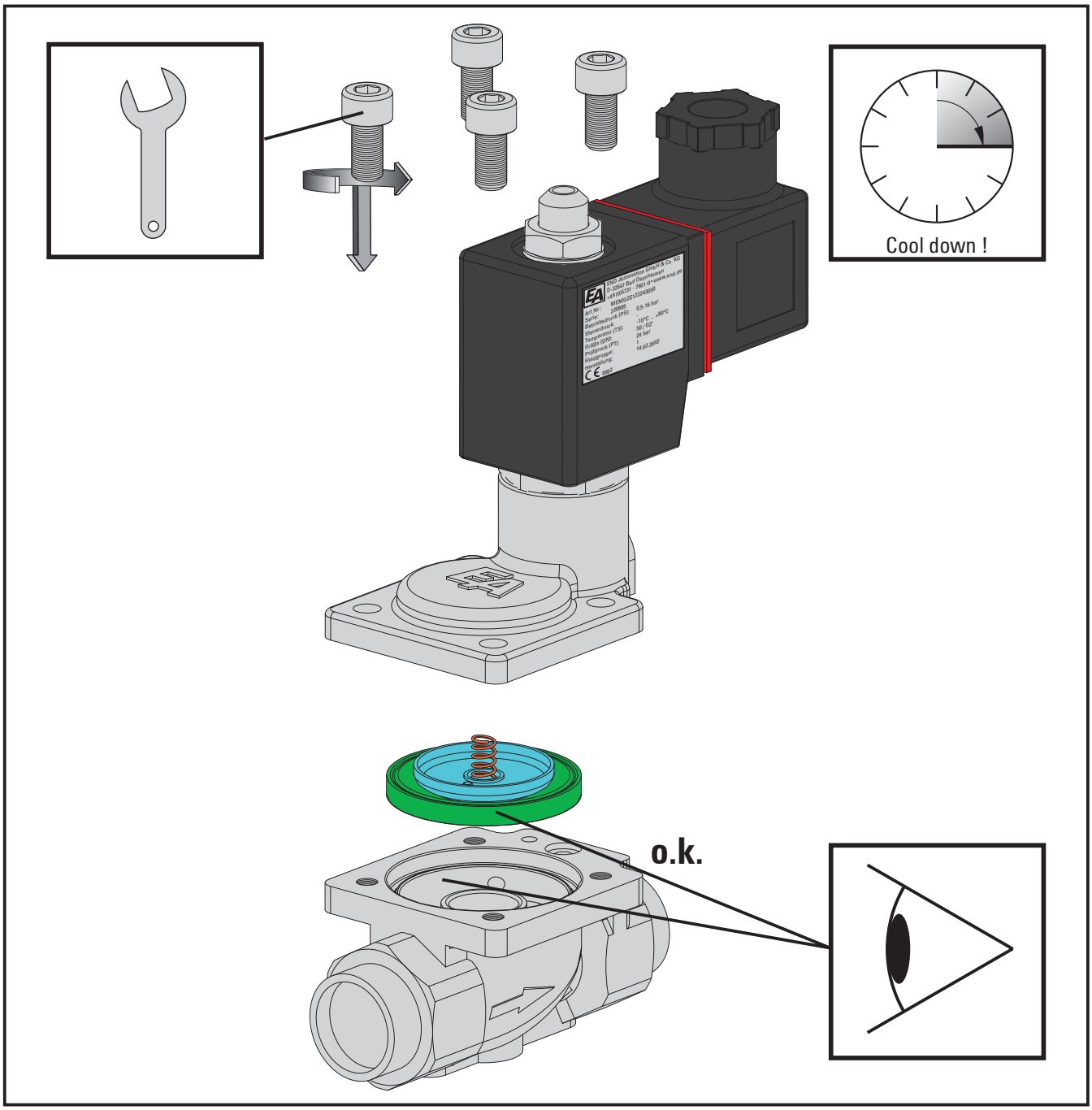

Fig. 5.4 - Mounting / disassembly - Welded connection, mounting of the valve top

5.3 Mounting of a solenoid valve (flange connection)

We assume, that you have mounted the flanges at the end of pipes and they are cooled down (e.g. welded flanges).

Push the valve body between the flanges by using the appropriate seals.

Aligns the flange boring and put the fit screws through the holes.

Screw the fit nuts onto the screws and tighten it up crosswise. By doing this observe the maximum torque of the used screws.

Check the tightness of all connections.

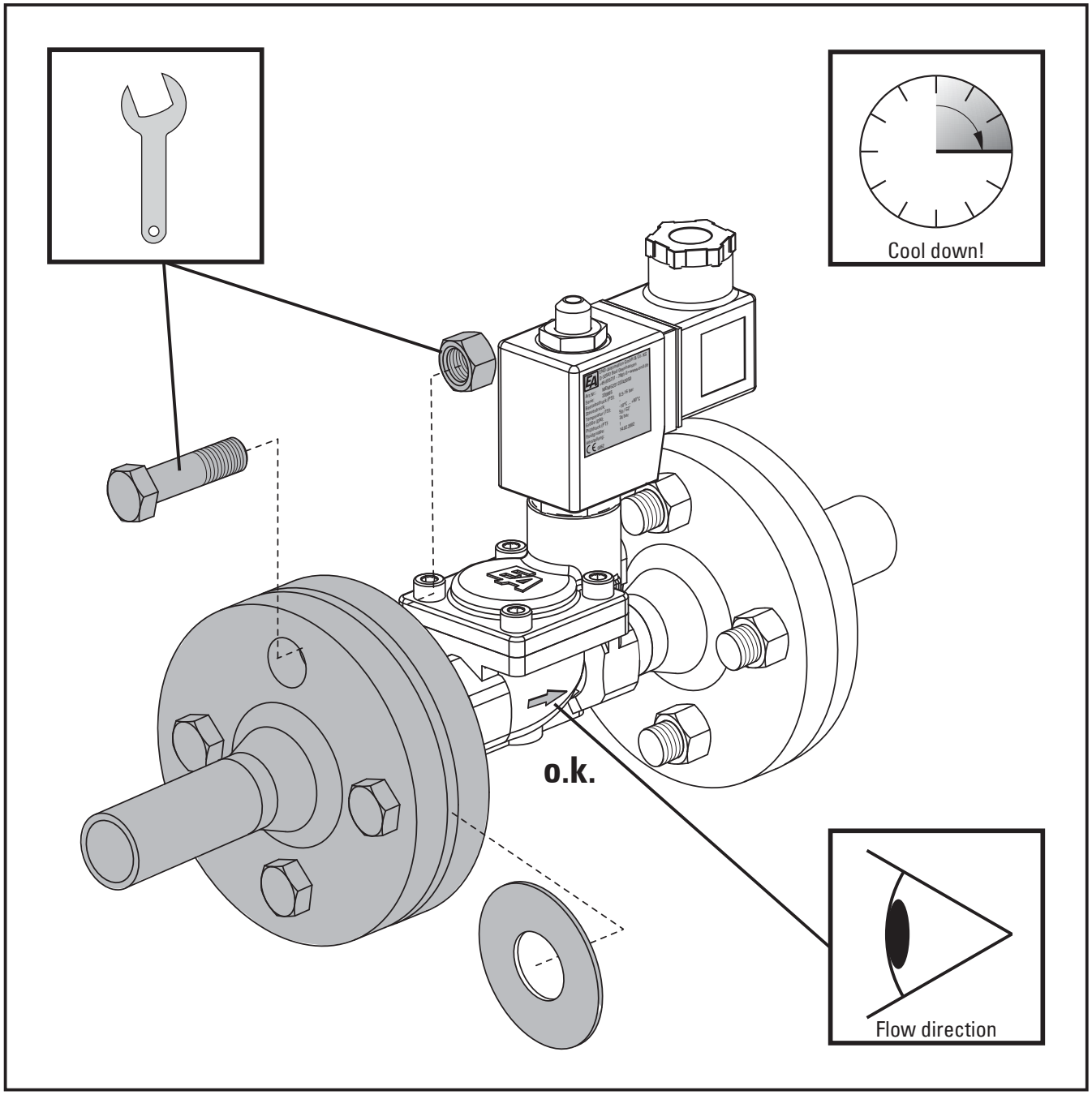

Fig. 5.5 - Mounting / disassembly - flange connection

5.4 Electrical installation

5.4.1 Electrical installation

Turn out the screw from the plug and remove the plug from the solenoid valve; open the plug.

By electrical installation of the solenoid valve use only the prescribed cable type.

Remove the sheaths of the cable and remove the isolation of the leads. In case of leads with stranded conductors, provide the ends in each case with a wire end sleeve.

Pass the cable through the PG screw fitting.

Put the leads end into the terminals and tighten the screw. The correct joining you will see in the wiring diagram.

STOP **Ensure that no bare wires protrude from the terminals and thus produce the risk of a current surge or of short circuit.**

Mount the plug. Take care that no lead will be squeezed. The cover of the plug can be fixed with 90° C.

Screw up the PG screw fitting so firmly that the strain relief is effective and the cable feed-through corresponds to the prescribed degree of protection.

Put the plug onto the solenoid valve and tighten the screw. Take care about the correct position of the plug contacts.

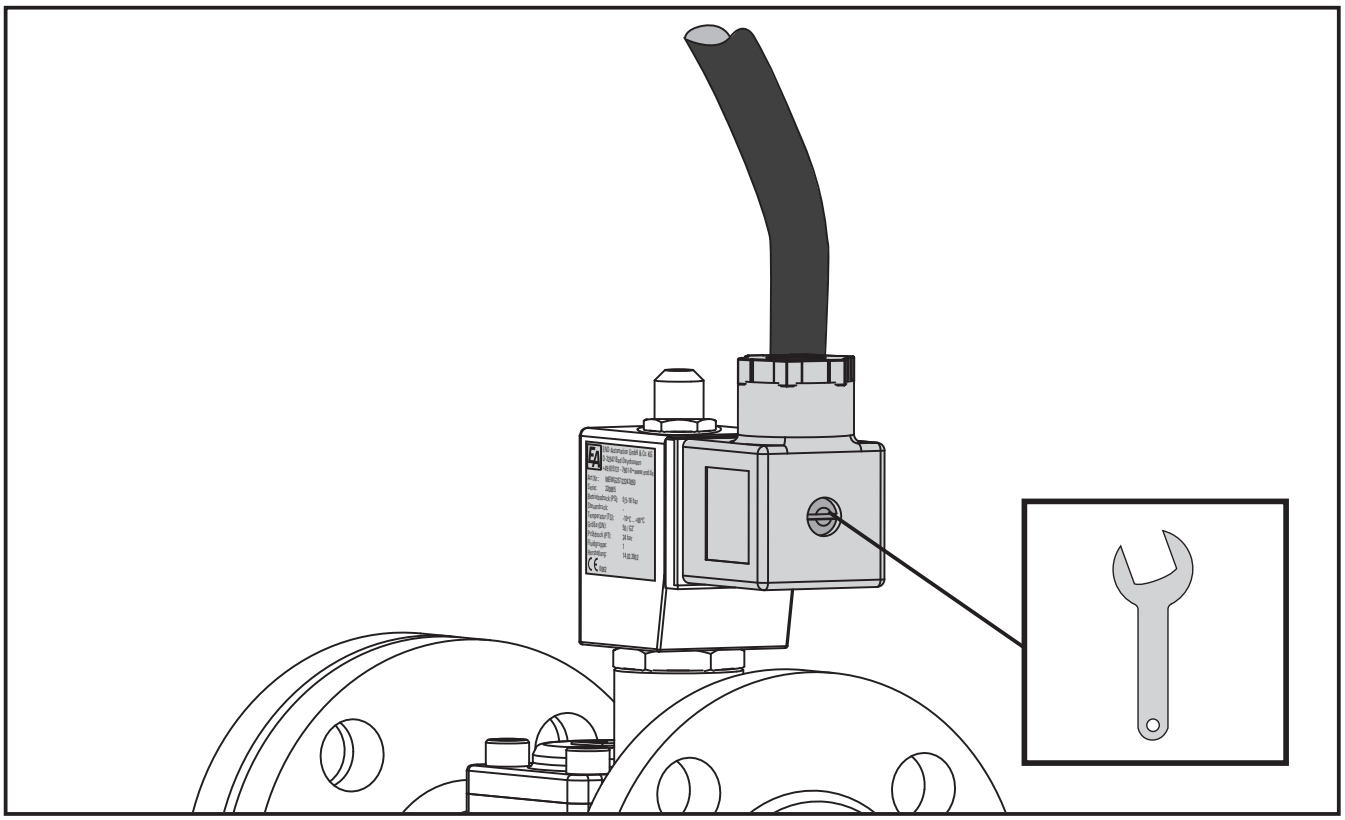

Fig. 5.6 - Mounting / Disassembly - Electrical installation

5.4.2 Wiring diagram and plug-contacts

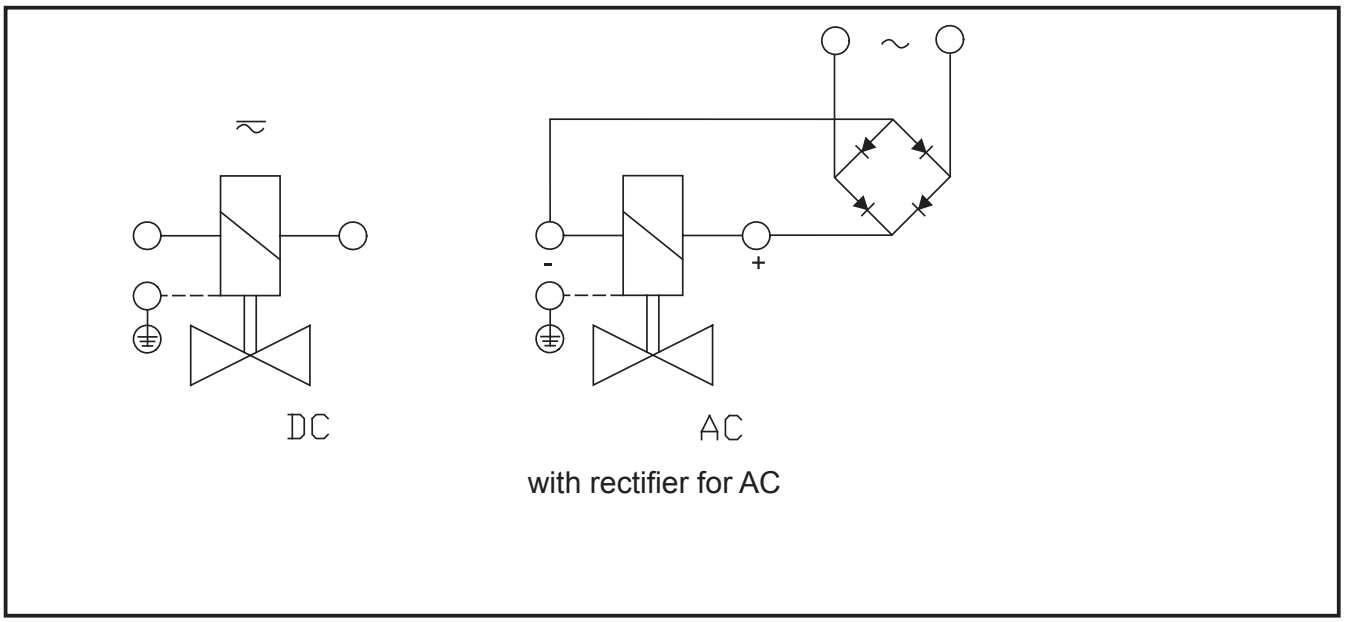

Fig. 5.7 - Mounting / Disassembly - wiring diagram

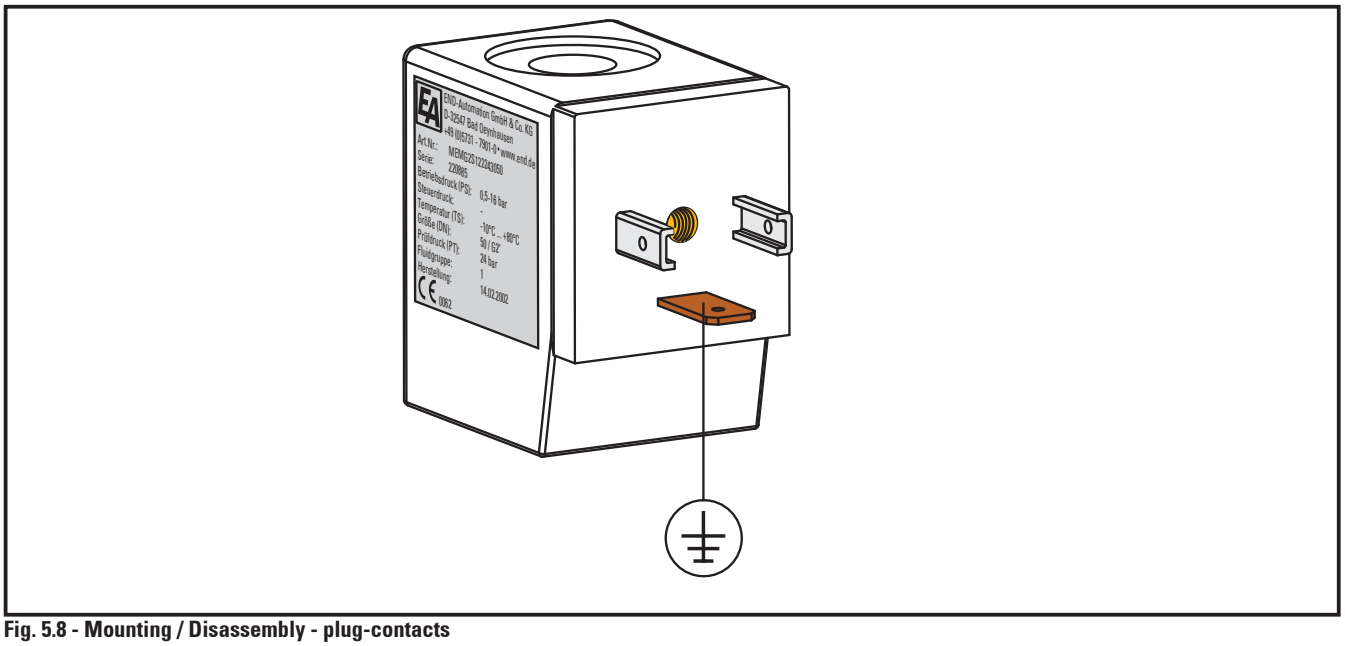

Fig. 5.8 - Mounting / Disassembly - plug-contacts

5.5 Disassembly

The disassembly of a solenoid valve in the principle proceeds in the reverse sequence to the mounting; some essential points should be clarified!

- Will the solenoid valve to be disassembled be replaced immediately by another?
- If appropriate, does the production process of the plant need to be stopped?
- Is it necessary to inform specific personnel about the disassembly? etc.

Switch off the power supply of the device / machine / plant.

Stop the medium. Never remove the solenoid valve under pressure.

If necessary, set up warning signs in order to prevent

- **the inadvertent starting up of the device / machine / plant or**
- **the switching on of the medium.**

In case of the working conditions, heating up of the coils up to 155 °C will be possible.

Keep ready some fit tanks to catch up leaking liquids.

5.5.1 Electrical disassembly

Switch off the power supply and take care to prevent the inadvertent switching on.

Don`t move off the solenoid from the tube by switched on power supply.

Loosen the screw at the plug on the solenoid.

Remove the plug from the solenoid.

5.5.2 Mechanical disassembly

Take care, that the device / machine / plant will be pressureless and take care to prevent the inadvertent switching on.

If the body of the solenoid valve have to been removed, loosen the flange connection, or loosen the pipes from the body of the solenoid valve.

Don`t use the tube and the plunger with the solenoid as a lever.

Close the pipes, if the pipes are not also being disassembled or are not be immediately reconnected to another solenoid valve.

6. Starting

Before starting the solenoid valve, you have to read the

→ safety advice.

If you have not done this until now, read this important advice now and then return to this page.

The starting of a solenoid valve, which is mounted in a plant (e.g. in a refinery or in a chemical plant) should only happen in accordance with the instructions of the hole plant!

Switch of the power supply of the control device.

Check the tightness of all pipe connections.

Check the function of the accessories.

7. Faults

If during the test run or during operation a functional fault of the solenoid valve should occur inform the shift foreman / safety engineer or the manager about the disturbance without delay in order, for example, to avoid an outflow / overflow of chemicals or a discharge of gases in good time by means of suitable measures!

Next, using the following list (7.1 Fault causes), attempt to find the reason for the causes of the failure and if it lies within your capabilities, to correct this.

Do not try to repair the solenoid valve!

Don`t move off the solenoid from the tube by switched on power supply.

In case of a defect in the solenoid valve make contact with the supplier. The telephone number will be found on the back cover or these mounting and installation manual.

7.1 Faults causes

- Is the power supply to the control device switch on?
- Is the plug at the solenoid mounted correctly?
- Is there a pressure difference (only direct acting and servo-assisted solenoid valves)?
- Is the working pressure as higher as allowed?

8 Maintenance / Cleaning

8.1 Maintenance

On normal accounts the solenoid valve is maintenance free.

Check in regular turns the tightness of the solenoid valves.

In case of a defect in the solenoid valve make contact to the supplier. The telephone number will be found on the back cover of these operation and installation manual.

If you determinate that there is a damage to the solenoid valve, isolate it from the power supply. However before doing this, it is essential to refer to the

→ **Safety advice.**

8.2 Cleaning

Clean the body of the solenoid valves required using a slightly moistened, soft cloth and a normal household cleaner.

Do not use any abrasive, corrosive or flammable cleaning agents!

Do not use any high-pressure cleaning devices!

Prevent moisture liquid penetrating into the interior of the device.

9 Index

Qualität von Anfang an.

(1) # Declaration in conformity

(2) ## as defined by Pressure-Equipment-Directive 97/23/EC

(3) This declaration apply to the article groups with the nominal sizes:

Articles	Size
solenoid valves	
MBMG2Z	¼" ... 2"
MBTG2S	¼“ ... 2“
MBTG2Z	¼“ ... 2“
MEAG2D	⅛" ... ½"
MEAG3D	⅛" ... ¼"
MEAG3S	¼" ... ½"

Articles	Size
MEMG2S	¼" ... 2"
MEMG2S	DN10 ... DN50
MGAG2D	⅛“ ... ½“
MGAG3D	⅛“ ... ¼“
MGBG3D	¼"
MGMF2S	DN10 ... DN50
MGMF2Z	DN15 ... DN50

Articles	Size
MGMG2S	¼" ... 3"
MGMG2Z	¼“ ... 2“
MGTF2S	DN15 ... DN250
MGTF2Z	DN15 ... DN250
MGTG2S	¼“ ... 2“
MGTG2Z	¼" ... 3"
MGUG3D	¼" ... 2"

and all variations of these articles

(4) of the company **END-Armaturen GmbH & Co. KG**
D-32547 Bad Oeynhausen
Germany

(5) Herewith we declare that the above-mentioned articles in the conditions of our delivery are in conformity with the regulations of Article 3 Part 3 of the directive 97/23/EG. These products bear no CE mark, but are in line to the good engineering practice designed and manufactured.

(6) Applied harmonized standards, in particular:

DIN EN 12516:2005 **Industrial valves - Shell design strength**

(7) On behalf

END-Armaturen GmbH & Co. KG
Oberbecksener Str. 78
32547 Bad Oeynhausen · Germany
Telefon: +49 (0)5731 - 7900-0
Telefax: +49 (0)5731 - 7900-199
http://www.end.de · post@end.de

Bad Oeynhausen, 24. September 2010

Friedhelm König
Technical Manager

Michael End
Quality Manager

Declaration without signature or company stamp shall not be valid. The declaration may be circulated only without alternation. Extracts or alternations are subject to approval by END-Armaturen GmbH & Co. KG.

Qualität von Anfang an.

(1) # Declaration of incorporation

(2) ## according to annex II of the Directive 2006/42/EC on machinery

(3) This declaration apply to the article groups:

Article	Nominal diameter
Magnetventile	
MBMG2Z	¼" ... 2"
MBTG2S	¼“ ... 2“
MBTG2Z	¼“ ... 2“
MEAG2D	⅛" ... ½"
MEAG3D	⅛" ... ¼"
MEAG3S	¼" ... ½"

Article	Nominal diameter
MEMG2S	¼" ... 2"
MEMG2S	DN10 ... DN50
MGAG2D	⅛“ ... ½“
MGAG3D	⅛“ ... ¼“
MGBG3D	¼"
MGMF2S	DN10 ... DN50
MGMF2Z	DN15 ... DN50

Article	Nominal diameter
MGMG2S	¼" ... 3"
MGMG2Z	¼“ ... 2“
MGTF2S	DN15 ... DN250
MGTF2Z	DN15 ... DN250
MGTG2S	¼“ ... 2“
MGTG2Z	¼" ... 3"
MGUG3D	¼" ... 2"

and all variations of these articles

(4) of the company: **END-Armaturen GmbH & Co. KG**
Oberbecksener Str. 78
D-32547 Bad Oeynhausen

Documentation authorized: **Lars-Michael Rolfsmeier**
Oberbecksener Str. 78
D-32547 Bad Oeynhausen

(5) Herewith we declare that the above mentioned articles in the conditions of our delivery are partly completed machinery according to annex 2 paragraph g of the directive 2006/42/EC on machinery. These products have no CE marking because of this directive.
The relevant technical documentation is compiled in accordance with part B of annex VII.

The solenoid valves are further in conformity with the regulations of the following directives:
Low Voltage Directive 2006/95/EC
Directive on Electromagnetic Compatibility (EMC) 2004/108/EC
The valves shall be provided with an electrical circuit which ensures the limits of the harmonised standards EN 61000 ff are observed, and hence the requirements of the Electromagnetic Compatibility Guideline 2004/108/EG (EEC) satisfield.

Applied harmonized standards, in particular:

EN ISO 12100-1: 2004	**Safety of machinery - Basic concepts, general principles for design - Part 1**
EN ISO 12100-2: 2004	**Safety of machinery - Basic concepts, general principles for design - Part 2**
DIN EN ISO 14121-1:2007	**Safety of machinery - Risk assessment - Part 1**
DIN EN 60204-1:2006	**Safety of machinery - Electrical equipment of machines - Part 1**

(6) In response to a reasoned request the national authorities can demand the relevant information on the partly completed machinery. The transmission takes place by post or e-mail.

(7) The partly completed machinery must not be put into service until the final machinery into which it is to be incorporated has been declared in conformity with the provisions of the Directive 2006/42/EC on machinery, where appropriate.

(8) Bad Oeynhausen, 09. November 2010, on behalf:

END-Armaturen GmbH & Co. KG
Oberbecksener Str. 78
32547 Bad Oeynhausen · Germany
Telefon: +49 (0)5731 - 7900-0
Telefax: +49 (0)5731 - 7900-199
http://www.end.de · post@end.de

Friedhelm König

Declaration without signature or company stamp shall not be valid. The declaration may be circulated only without alternation.
Extracts or alternations are subject to approval by END-Armaturen GmbH & Co. KG.

END ARMATUREN

watergates
knife-gate-valves - Stoffschieber

Qualität von Anfang an.

END-Armaturen GmbH & Co. KG
Oberbecksener Str.78
D-32547 Bad Oeynhausen
Postfach (PLZ 32503) 100 341
Telefon +49 (0) 5731 / 7900-0
Telefax +49 (0) 5731 / 7900-199
Internet http://www.end.de
E-Mail post@end.de

Watergates GmbH & Co. KG
Oberbecksener Str.70
D-32547 Bad Oeynhausen
Postfach (PLZ 32503) 100 321
Telefon +49 (0) 5731 / 7900-0
Telefax +49 (0) 5731 / 7900-199
Internet http://www.watergates.de
E-Mail post@watergates.de

ISO 9001
97/23/EG
BUREAU VERITAS
Certification
N° INT80209DE