FLUCOM ITALY

DIRECTIONAL CONTROL THREE WAY CHECK VALVES

PILOT OPERATED GUIDED POPPET–TYPE WITH STROKE LIMITING TO OPEN

CAP 20/..–L

05.140

01.04

Technical features

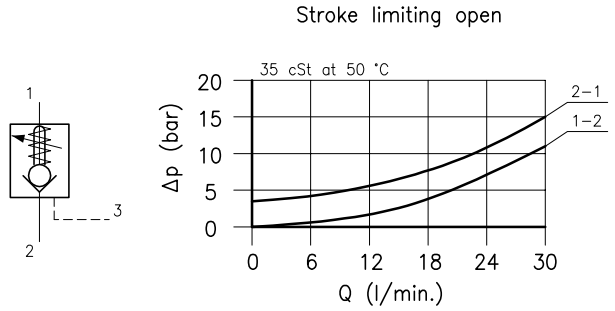

Cavity (For dimensions see catalogue 17.000)		S 20/3
Nominal flow	(l/min.)	25
Max. pressure	(bar)	350
Pilot ratio		2.5:1
Pilot volume	(cm^3)	0.05
Fluid viscosity range	(cSt)	2.8 – 380
Fluid temperature range	(°C)	–20 +80
Mass	(kg)	0.110
Hydraulic fluid; mineral oil HM and HV ISO 6074		
Recommended filtration; 19/15 ISO 4466 (25 μ absolutes)		
Standard seals in Polyurethane and Buna N		

Dimensions

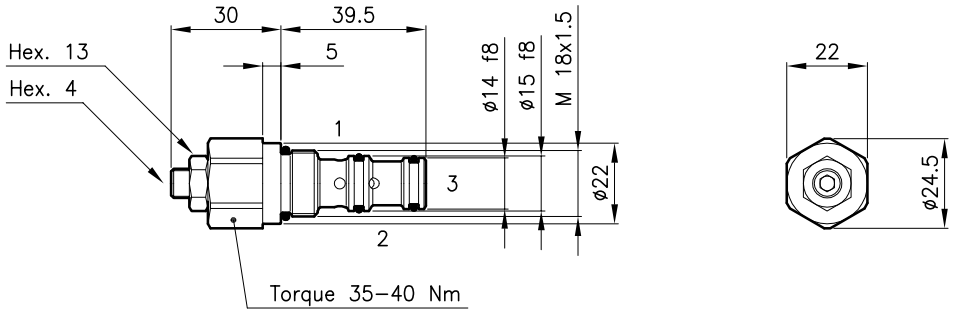

Ordering informations

CAP 20/M–L

CAP 20 = Valve type

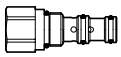

Standard spring

M = 3.5 bar

L = Stroke limiting to open

Codes:

CAP 20/M–L	22 011 160
External seals kit	90 620 101

CAP 20 valves can be assembled on standard bodies 20–C3 series; for dimensions see catalogue 16.010