MVHD-220 series

HAND LEVER **VALVE**

mindman

Specification

Model	MVHD-220-3P	MVHD-220-4P
Bore No.	8A	6A, 8A
Port size	1/4	1/8, 1/4
No. of port	3	5
No.of position	2	
Medium	Air	
Operating pressure range	0~0.8 MPa	
Effective orifice	18 mm^2	
Ambient temperature	-5~+50°C (No freezing)	
Weight	151 g	170 g

Order example

MVHD — 220 — 4P — NC — □ — SP — G

- MVHD: MODEL
- 220: BODY WIDTH
- 4P: ACTUATOR TYPE
  - **3**: 3way (3 port)
  - **4**: 4way (5 port)
  - **P**: Push-pull
- NC: BORE SIZE
  - **NC**: Normally closed
  - **NO**: Normally open (Only for **3P**)
- □: BORE SIZE
  - Blank: 1/4
  - **6A**: 1/8 (Only for **4P**)
- SP: SPRING RETURN
- G: PORT THREAD
  - Blank: Rc thread
  - **G**: G thread
  - **NPT**: NPT thread
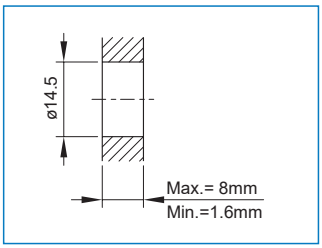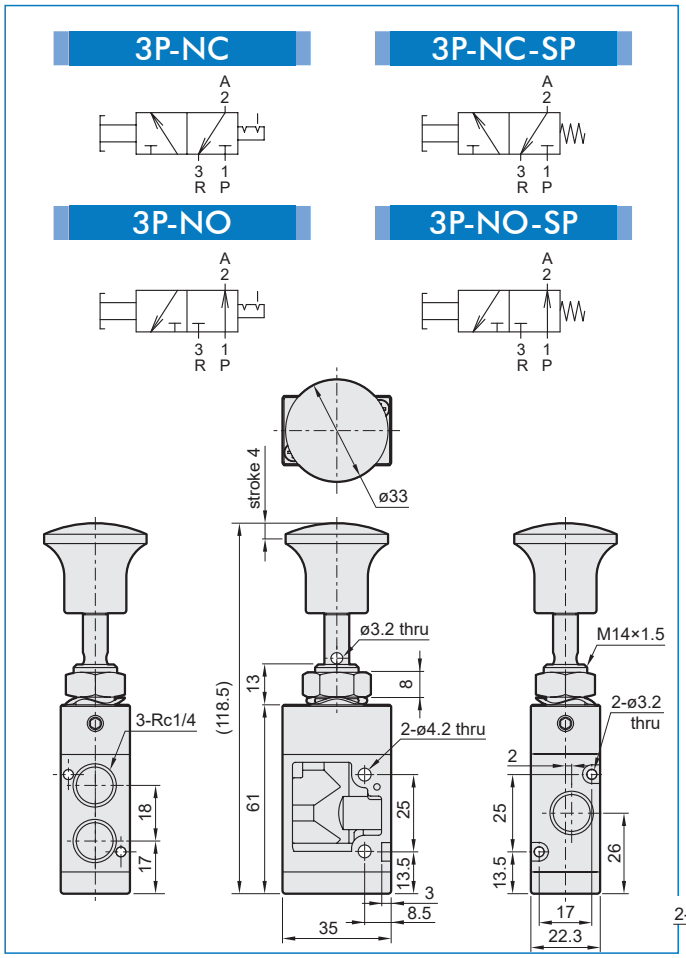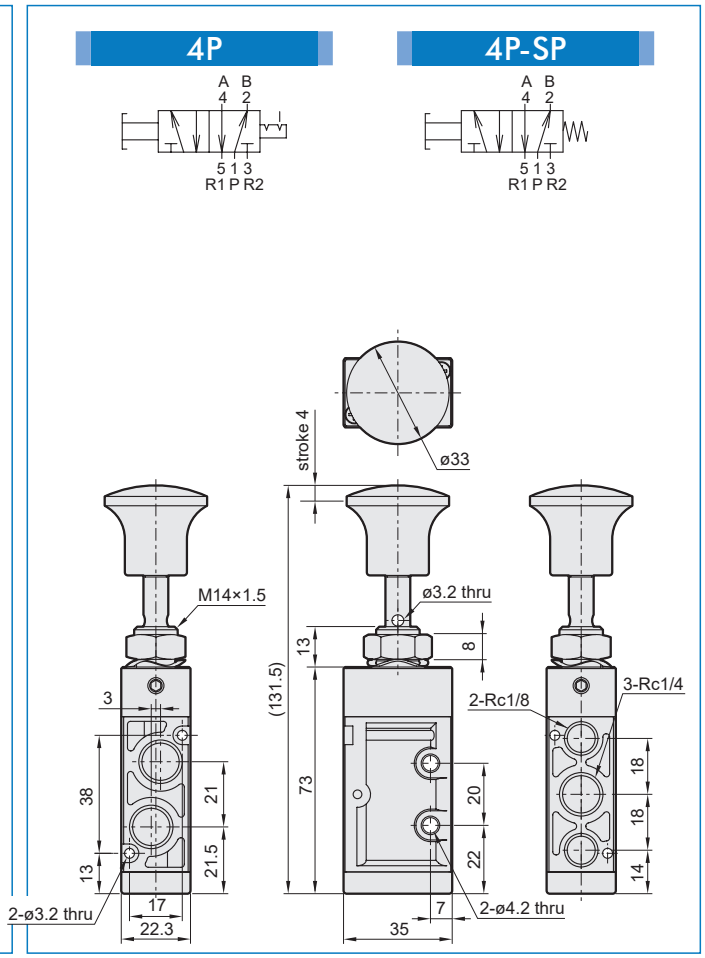
Panel mounting hole