MRB / MRC series

2/2 WAY N.O. PLUNGER TYPE **SOLENOID VALVE**

mindman

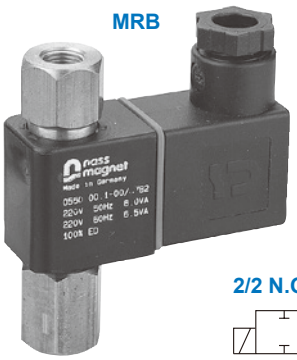

2/2 N.O.

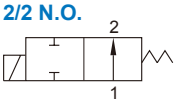

Specification

- IP65 100% ED coil.
- PTB approval EExm II T4 coil.
- Opening: 5~20 ms, Closing: 10~40 ms

Power consumption

Coil power	2	2E	4	5	3E
AC (VA)	6.9	5.3	17.6/15.4	33/23	9.2
DC (W)	6.2	5.2	15	18.5	10

Dimensions

Model	MRB		MRC		
Code Dimension (mm)	03	06	03	06	10
L	77	78.6	98		
H	50		53		
W	22 (30)		34		
S	19.5		16		
S'	–		8		
N.W (g)	146(466)	141(461)	450		

*( ) the value for #2E.

Order example

MRB – 06 – 2 – N – 2 – □ – AC110 – □

- MODEL: **MRB**, **MRC**
- CODE: **03**: 1/8, **06**: 1/4, **10**: 3/8
- FIG.: **1**, **2**, **3**, **4**, **5**
- SEAL MAT'L: **N**: NBR, **J**: EPDM, **V**: Viton
- COIL: **2**, **2E**, **4**, **5**, **3E** (*)
- PLUG: Blank: DIN, **D**: LED, **G**: 1/2" NPT, **Y**: 2 wires (only for coil #2)
- VOLTAGE: **AC220**V(50/60)Hz, **AC110**V(50/60)Hz, **DC24**V
- PORT THREAD: Blank: Rc thread, **G**: G thread, **NPT**: NPT thread

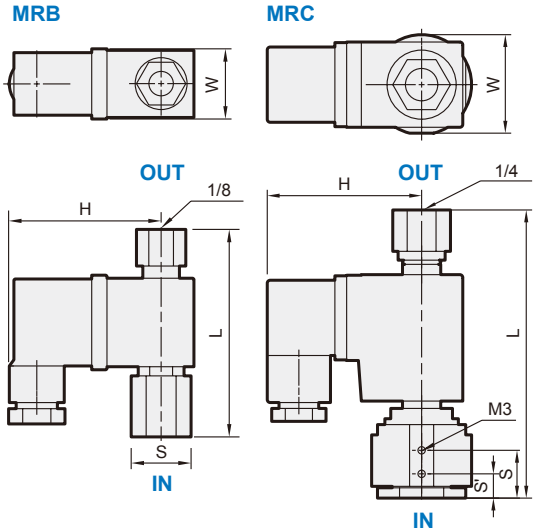

* Explosion-Proof (**2E/3E**) coil with LED (**D**) plug is not applicable.

Specification

Model **MRB**: Brass body, 2/2 way N.O., for water, air, gas, light oil.								
Code (Port)	Fig. no.	Seal mat'l	Coil	Orifice mm	Seal temp. °C	Working press. bar		CV	VAC. torr
					Coil 2, 2E	Coil 2	Coil 2E		
					V	AC/DC			
03(1/8) 06(1/4)	1	V	2, 2E	1.3	-10~80	0~10	0~10	0.05	10^{-2}
	2			1.5		0~8	0~8	0.09	

Model **MRC**: Brass body, 2/2 way N.O., for water, air, gas, light oil.													
Code (Port)	Fig. no.	Seal mat'l	Coil	Orifice mm	Seal temp. 5~°C						Working press. bar			CV	VAC. torr
					Coil 4, 3E			Coil 5			Coil 4	Coil 5	Coil 3E		
					N	J	V	N	J	V	AC/DC				
03(1/8) 06(1/4) 10(3/8)	1	N J V	4 5 3E	1.6	90	120		90	150		0~16	0~24	0~16	0.10	10^{-3}
	2			2.0							0~13	0~20	0~13	0.15	
	3			2.2							0~10	0~16	0~10	0.17	
	4			2.5							0~7	0~10	0~7	0.20	10^{-2}
	5			3.0							0~5	0~7	0~5	0.31	